Testing Honeywell Modutrol IV Motor

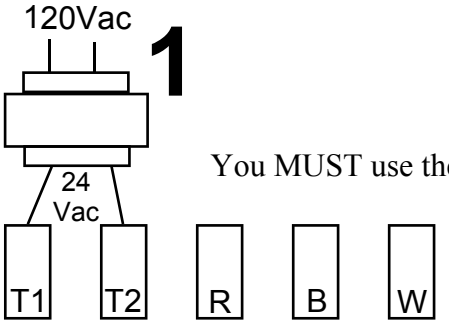

You MUST use the transformer to supply 24Vac to T1/T2

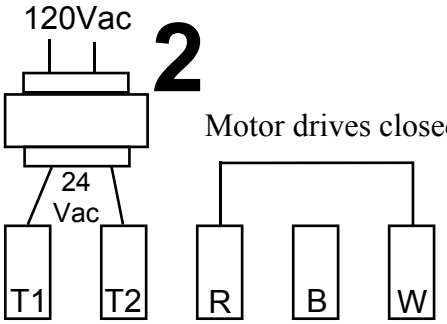

Motor drives closed

If motor does not drive closed, replace motor

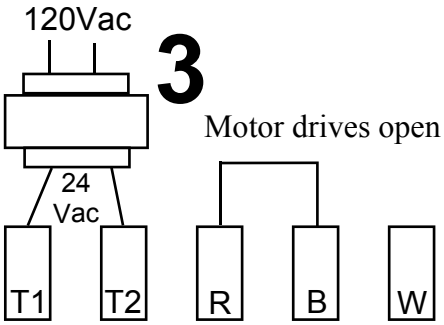

Motor drives open

If motor does not drive open, replace motor

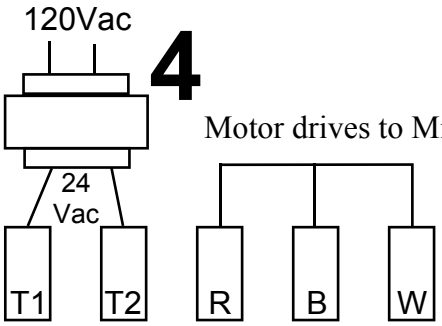

Motor drives to Mid-position

If motor does not drive to mid-position, replace motor

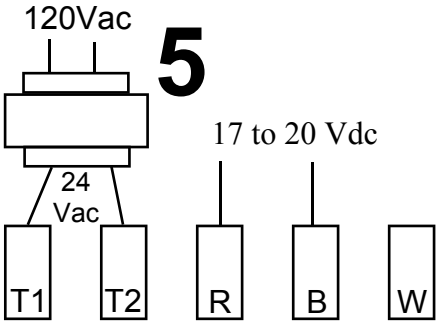

17 to 20 Vdc

If voltage is out of range
Or no voltage then motor
circuit board is bad.
Replace motor

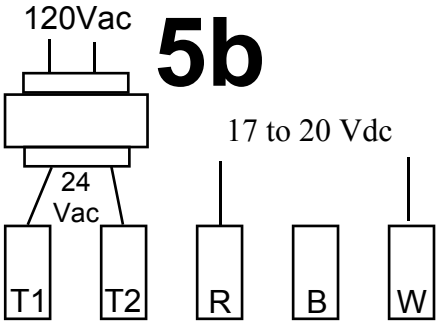

17 to 20 Vdc